PART II

MANUFACTURER'S DATA

FOR TRAINING ONLY

FOR TRAINING ONLY

LIST OF REVISED PAGES

Revision No.	Subject	Date
—	Issue	31-5-1996
—	Issue (Supersedes issue dated 31-5-1996)	25-7-1996
—	Issue (Supersedes issue dated 25-7-1996)	30-7-1997
1		Not affected
2	Revised pages C-1/C-2, 7-21 and 7-24.	29-1-1998
3		Not affected
4		Not affected
5	Revised pages C-1/C-2, Section 7 and Section 8.	8-5-1998
6	Revised pages C-1/C-2 and 7-2	29-5-1998
7	Revised pages C-1/C-2, 6-4, 6-11, 7-ii, 7-45 and 7-46. Added page 7-47/7-48.	26-11-1998
8		Not affected
9		Not affected
10		Not affected
11	Revised pages C-1/C-2, 6-2, 6-5, 6-6, 7-39, 7-40 and 7-41. Added page 6-6A and 6-6B.	26-7-1999
12		Not affected
13		Not affected
14		Not affected
15		Not affected
16		Not affected
17		Not affected

FOR TRAINING ONLY

LIST OF REVISED PAGES (CONT.)

Revision No.	Subject	Date
18		Not affected
19	Revised pages C-1, 7-21, 7-22, 8-9, 8-10. Added page C-2.	16-3-2000
20		Not affected
21	Revised pages C-2 and 7-44.	24-5-2000
22		Not affected
23		Not affected
24		Not affected
25		Not affected
26		Not affected
27		Not affected
28		Not affected
29		Not affected
30		Not affected
31		Not affected
32		Not affected
33		Not affected
34		Not affected
35	Revised pages C-2, 6-i/6-ii blank), 6-11, 6-12, 7-45, 7-46 and S-1/(S-2 blank).	03-03-2004
36		Not affected
37	Revised pages C-2, 7-45 and 7-46.	14-07-2004
38		Not affected
39		Not affected
40		Not affected
41	Revised pages C-2, 7-ii, 7-47 and 7-48. Added pages 7-iii, 7-iv, 7-49, 7-50.	08-06-2005

FOR TRAINING ONLY

SECTION 6
WEIGHT AND BALANCE

TABLE OF CONTENTS

	Page
GENERAL	6–1
DATUM LINE LOCATIONS	6–1
WEIGHTS - ARMS AND MOMENTS	6–3
LONGITUDINAL MOMENTS	6–3
LATERAL ARMS	6–6
COMPUTATION OF LOADING	6–6
LONGITUDINAL LOADING SAMPLES	6–6
LATERAL LOADING SAMPLE	6–8
WEIGHT AND BALANCE DETERMINATION	6–9
WEIGHT AND BALANCE DATA RESPONSIBILITY	6–9
HELICOPTER WEIGHING	6–9
USE OF CHARTS AND FORMS	6–10
USE OF CHART A	6–10
WEIGHING INSTRUCTIONS	6–10
USE OF CHART B	6–13
USE OF CHART C	6–13

LIST OF ILLUSTRATIONS

	Page
Figure 6-1. Helicopter Stations Diagram.	6–2
Figure 6-2. Baggage loading zones.	6–6A
Figure 6-3. Weighing of helicopter.	6–12

FOR TRAINING ONLY

FOR TRAINING ONLY

SECTION 6
WEIGHT AND BALANCE

NOTE

In accordance with R.A.I. procedures, the detail weight and balance data of this Section are not subject to R.A.I. approval. The loading instructions of this Section, however, have been accepted by R.A.I. as satisfying all requirements for instructions on loading of the rotorcraft within approved limits of weight and center of gravity, and on maintaining the loading within such limits.

GENERAL

This Section provides information for the weight and balance computation of A109E helicopter.
It is the pilot's responsibility to ensure that the helicopter is properly loaded to maintain all flight long the center of gravity within the limitations defined in Section 1 of the Rotorcraft Flight Manual.
Figures, charts and examples are provided to assist the pilot in computing the proper loading conditions.

DATUM LINE LOCATIONS

Figure 6-1 presents fuselage station and buttock line data to aid in weight and balance computations.

FOR TRAINING ONLY

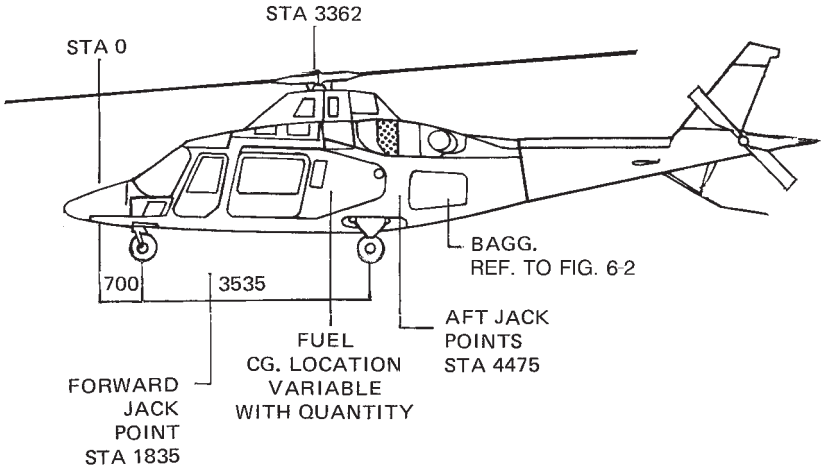

STANDARD VERSION
PILOTS AND PASSENGERS STATION

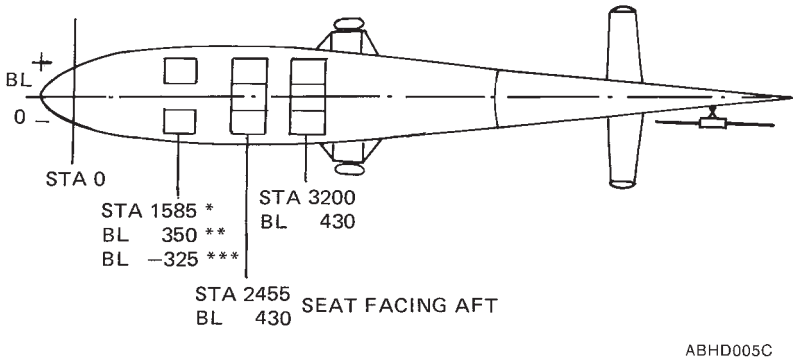

* ADJUSTABLE FROM 1565 TO 1630

** PILOT

*** COPILOT/PASSENGER

Figure 6-1. Helicopter Stations Diagram.

FOR TRAINING ONLY

WEIGHTS - ARMS AND MOMENTS

LONGITUDINAL MOMENTS

Pilots and Passengers			
Weight (kg)	Pilot (*) Copilot or Passenger (Arm 1585) Moment (kgm)	Passengers 3 places central seat aft facing (Arm 2455) Moment (kgm)	Passengers 3 places aft seat (Arm 3200) Moment (kgm)
60	95	147	192
65	103	160	208
70	111	172	224
75	119	184	240
80	127	196	256
85	135	209	272
90	143	221	288
95	151	233	304
100	158	245	320
120	190	295	384
140	222	344	448
160	254	393	512
180	285	442	576
200	317	491	640
220		540	704
240		589	768
260		638	832
280		687	896
300		736	960
320		786	1024

(*) Adjustable from 1565 to 1630

FOR TRAINING ONLY

USABLE FUEL (Arm - see below)			
Weight (kg)	(l) (0.8 kg/l)	Arm (mm)	Moment (kgm)
20	25	3324	66.5
40	50	3327	133.1
60	75	3329	199.7
80	100	3331	266.5
100	125	3399	339.9
120	150	3461	415.3
140	175	3505	490.7
160	200	3539	566.2
180	225	3543	637.7
200	250	3551	710.2
220	275	3571	785.6
240	300	3614	867.4
260	325	3662	952.1
280	350	3703	1036.8
300	375	3739	1121.7
320	400	3770	1206.4
340	425	3797	1291.0
360	450	3821	1375.6
380	475	3843	1460.3
400	500	3863	1545.2
420	525	3880	1629.6
440	550	3897	1714.7
460	575	3911	1799.1
476	595	3921	1866.4

UNUSABLE FUEL (Arm - see below)			
Weight (kg)	(l) (0.8 kg/l)	Arm (mm)	Moment (kgm)
8	10	3320	26.6

FOR TRAINING ONLY

ENGINE OIL (Arm 4280)		
Weight (kg)	(l)	Moment (kgm)
10.5	10.24	44.9

UNDRAINABLE ENGINE OIL (Arm 4280)		
Weight (kg)	(l)	Moment (kgm)
2.09	2.15	8.9

MAIN TRANSMISSION OIL (Arm 3441)		
Weight (kg)	(l)	Moment (kgm)
10.7	11	36.8

FOR TRAINING ONLY

ALLOWABLE BAGGAGE LOAD
(MAXIMUM TOTAL LOAD = 150 kg)

	ZONE 1 c.g. 4880 Note 1	ZONE 2 c.g. 5240 Note 1	ZONE 3 c.g. 5560 Note 1	ZONE 4 c.g. 5960 Note 1	ZONE 5 c.g. 6430 Note 1
Baggage load (KG)	Baggage moment (KGM)				
10	49	52	56	60	64
20	98	105	111	119	129
30	147	157	167	179	193
40	195	209	222	238	257
50	244	262	278	298	321
60	293	314	333	358	386
70	342	367	389	417	450
80	391	419	444	477	514
90	440	471	500	536	578
100	489	524	556	596	643
105	513	550	583	626	675
108	528	565	600	644	694
110	537	576	611	656	*
115	562	602	639	685	*
120	586	628	667	715	*
123	601	644	683	733	*
130	635	681	722	*	*
132	645	691	733	*	*
135	660	707	*	*	*
140	684	733	*	*	*
150	733	*	*	*	*

* No loading area
NOTE 1: Refer to figure 6-2.

FOR TRAINING ONLY

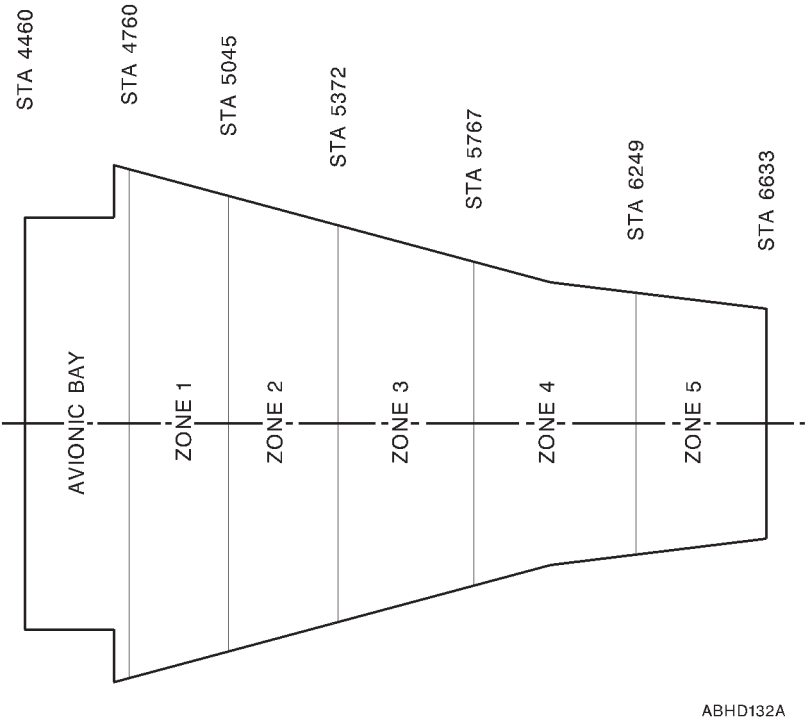

Figure 6-2. Baggage loading zones.

FOR TRAINING ONLY

LATERAL ARMS

Item	Buttock line (mm)
Pilot	+350
Copilot	- 325
Passengers	See figure 6-1
Baggage	0

COMPUTATION OF LOADING

LONGITUDINAL LOADING SAMPLES

The empty weight and moment of the A109E can be found in the helicopter Weighing Record (Chart B). The values in Chart B were obtained by weighing the aircraft and computing the empty weight, moment and CG therefrom.

Subsequently as items of equipment are added or removed, entries should be made in the Basic Weight and Balance Record (Chart C) and the new empty weight and moment computed.

The empty weight includes fixed ballast, hydraulic fluid, unusable fuel, undrainable engine oil and transmission oil.

Three sample loadings are shown below (in the sample loading the empty weight and CG arm are assumed to be 1600 kg and 3550 mm).

a) Item	Weight (kg)	CG Arm (mm)	Moment (kgm)
Empty Weight	1600	3550	5680
Engine oil	10	4280	43
Pilots (2)	160	1585	254
Passengers (3) Front	240	2455	589
Baggage	50	5300	265
Total weight	2060	3316	6831
Fuel at Take-off	100	3399	340
Take-off Weight	2160	3320	7171
Fuel at Landing	70	3330	233
Landing Weight	2130	3316	7064

FOR TRAINING ONLY

b) Item	Weight (kg)	CG Arm (mm)	Moment (kgm)
Empty Weight	1600	3550	5680
Engine oil	10	4280	43
Pilot	70	1585	111
Passengers (3) Front	250	2455	614
Passengers (3) Rear	220	3200	704
Baggage	90	5300	477
Total weight	2240	3406	7629
Fuel	370	3833	1418
Take-off Weight	2610	3466	9047
Fuel at Landing	70	3330	233
Landing Weight	2310	3403	7862

c) Item	Weight (kg)	CG Arm (mm)	Moment (kgm)
Empty Weight	1600	3550	5680
Engine oil	10	4280	43
Pilots (2)	140	1585	222
Passengers (3) Front	250	2455	614
Passengers (3) Rear	224	3200	714
Baggage	150	5300	795
Total weight	2374	3398	8068
Fuel	476	3912	1862
Take-off Weight	2850	3484	9930
Fuel at Landing	70	3330	233
Landing Weight	2444	3396	8301

The Weight - CG combination in the three examples above fall within the approved limits.

FOR TRAINING ONLY

LATERAL LOADING SAMPLE

The empty weight CG is assumed to be at station ″0″ unless a different entry has been made in Chart C. With the empty CG at station ″0″ the approved lateral loading limits will not be exceeded except under extreme lateral loadings. An example of an asymmetric loading computation is given below.

Item	Weight (kg)	CG Arm (mm)	Moment (kgm)
Empty Weight	1600	0	0
Engine oil (N°1)	5	- 300	- 1.5
Engine oil (N°2)	5	+ 300	+ 1.5
Pilot	80	+ 350	28
Pass (1) right	80	+ 430	34.40
Pass (1) center	80	0	0
Fuel (right lower cell)	80	+ 340	27.20
Fuel (left lower cell)	40	- 340	- 13.60
Baggage	50	0	0
Take-off Weight	2020	37.6	76

The weight-CG combination computed above falls within the approved limits.

FOR TRAINING ONLY

WEIGHT AND BALANCE DETERMINATION

Instructions for weight and balance determination are herewith enclosed with instructions for use of charts to enable the operator to obtain all necessary data as to basic helicopter configuration, empty weight and center of gravity. These charts will also provide for continuous control of weight and balance of the helicopter.

This system of weight and balance computation requires the use of charts and forms. They are identified as follows:

a. Chart A - Equipment List.
b. Chart B - Helicopter Weighing Record.
c. Chart C - Basic Weight and Balance Record.

WEIGHT AND BALANCE DATA RESPONSIBILITY

The aircraft manufacturer inserts all helicopter identifying data on the various charts. This record constitutes the basic weight and balance data of the helicopter, to which the Rotorcraft Flight Manual was assigned, for the condition shown on chart A. The operator shall keep this data up-to-date by recording all changes made to the configuration of the helicopter.

HELICOPTER WEIGHING

The helicopter must be weighed:

a. When major modifications or repairs are made, or kits are installed/removed.
b. When the basic weight data is suspected to be an error.
c. At time of major overhaul.
d. In accordance with R.A.I instructions.

FOR TRAINING ONLY

USE OF CHARTS AND FORMS

USE OF CHART A

The Chart A gives the weight, arm and moment of all the standard and optional equipment. The manufacturer of the helicopter places check marks in the ″Basic Configuration″ column to identify the items of equipment in the helicopter for the weighing condition. A check (V) in the columns headed ″In Helicopter″ indicates the presence of the item in the helicopter, and a zero (0) indicates its absence. The next columns of chart A will permit inspection of the helicopter for equipment actually installed. When making an inventory, note whether any items of equipment have been installed or removed and if so enter corresponding weight and moment change on Chart C.

Subsequent check list inventories shall be carried out in the following cases:

a. When the helicopter undergoes modification, major repair or overhaul.
b. When changes in equipment are made for a different type of operation.
c. When the helicopter is reweighed.

WEIGHING INSTRUCTIONS

Preliminary instructions

a. Remove dirt, grease, moisture, etc. from the helicopter.

NOTE

The helicopter must be weighed in a closed hangar.

b. Drain fuel from tanks.

NOTE

If it is impossible to drain fuel due to fire hazard or local regulations, fill fuel tanks to capacity. Since the weight of fuel varies with temperature, determine actual specific gravity by use of a hydrometer. Multiply by tank capacity to obtain total fuel weight. Never weigh with partially filled tanks.

c. Drain engine oil or fill to normal capacity.
d. Fill main transmission to normal level.
e. Fill hydraulic fluid reservoirs to normal level.
f. Conduct an inventory of the operating equipment actually installed in the helicopter by means of Chart A.

FOR TRAINING ONLY

Weighing procedure
Fig. 6-2

a. Install levelling equipment on helicopter as outlined in Section 08-20 of Maintenance Manual.
b. Make sure that weighing equipment is zeroed.
c. Install nose gear shock locking cable, see Fig. 6-3.
d. Connect to each of the three weighing equipment cell (4), adapter (3) and centering pin (5).
e. Position jacks (6), weighing equipment cells (4) and appropriate adapters (2) under respective jacking points.
f. Raise helicopter until wheels are clear of ground and level it as outlined in Section 08-20 of Maintenance Manual.
g. Read and note scale readings and enter data in appropriate Chart B.
h. Lower helicopter on the ground and remove all equipment used for weighing.

FOR TRAINING ONLY

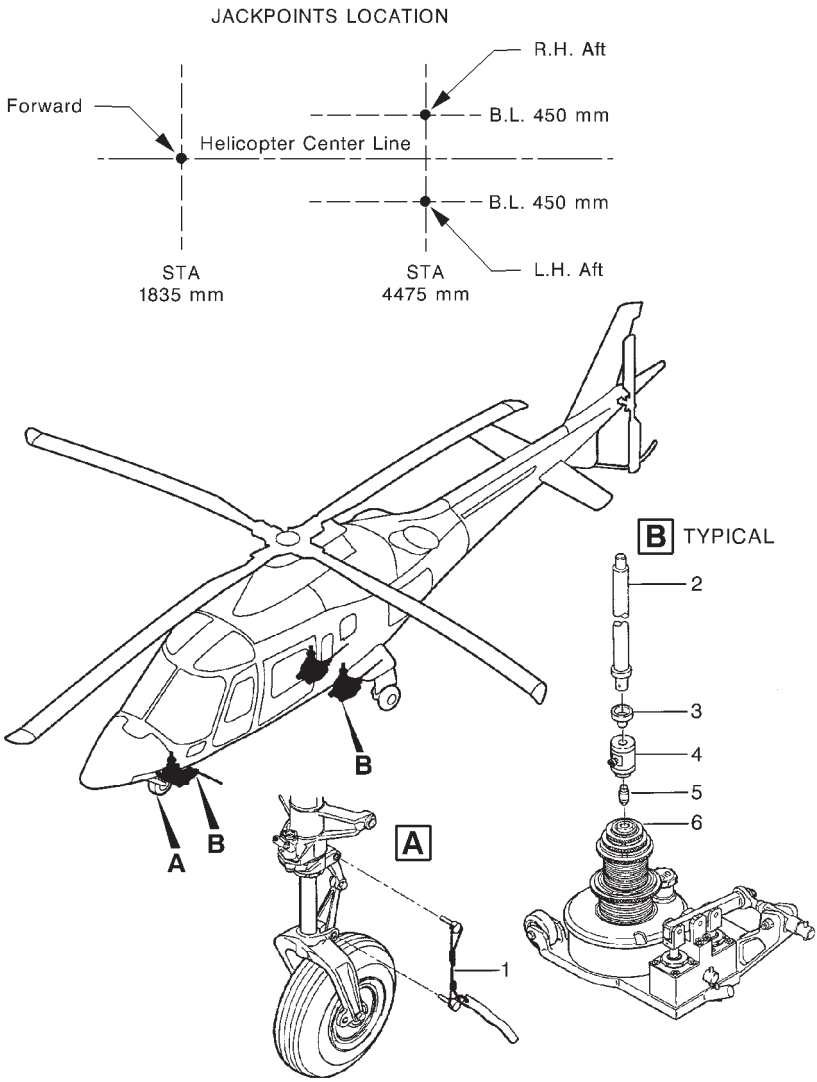

1. Nose gear shock strut locking cable
2. Jacking adapter (typ)
3. Adapter
4. Weighing equipment cell
5. Centering pin
6. Jack

Figure 6-3. Weighing of helicopter.

FOR TRAINING ONLY

USE OF CHART B

a. Enter the actual scale readings in the first column of sheet 1. Subtract tare, if any, from the scale readings to obtain the net weight.
b. Multiply the net weights by their respective arms.
c. Add the net weight and moments.
d. Divide the total moment by the net weight to obtain ″as weighed″ CG position. Transfer the ″TOTAL″ (as weighed) weight arm and moment to the sheet 2 of Chart B.
e. Subtract the weight and moment of oil (if reservoir is full) from the ″as weighed″ total.
f. Subtract the total weight and moment of equipment weighed but not part of the basic helicopter (list these items in column one).
g. Add the weight and moment of unusable fuel.
h. Add the total weight and moment of the basic items not in helicopter when weighed (list these in column two). Added items shall be marked on Chart A.
i. Enter the new basic weight and moment on Chart C.

USE OF CHART C

Chart C is a continuous history of the basic weight and moment resulting from modifications and equipment is considered the current weight and balance status of the basic helicopter. Make additions or subtractions to the basic weight and moment in Chart C as follows:

a. When the helicopter undergoes modification, major repair or overhaul.
b. When changes in equipment are made for a different type of operation.
c. When the helicopter is reweighed.

NOTE

If any equipment is not listed on Chart A, determine its weight and arm, and list corresponding data on Charts A and C.

FOR TRAINING ONLY

FOR TRAINING ONLY

WEIGHT AND BALANCE DATA

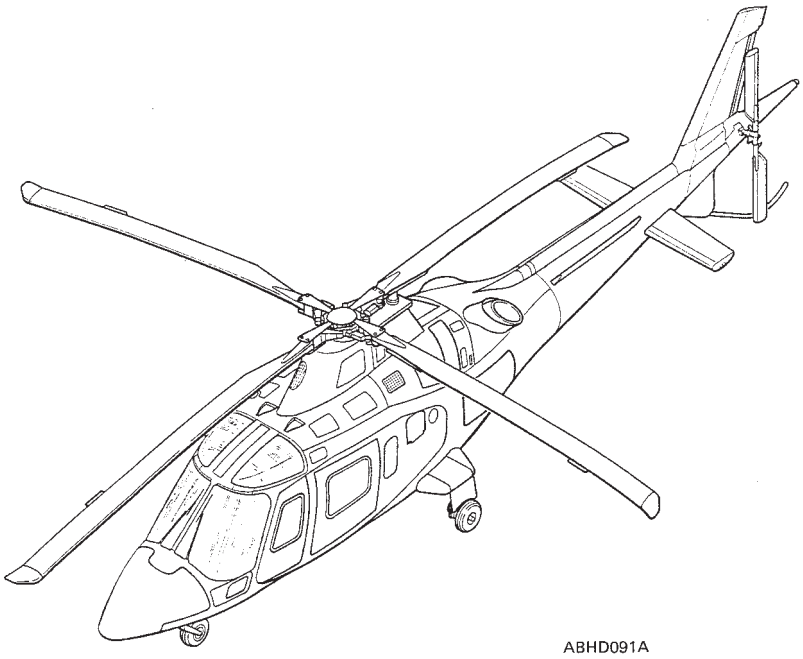

HELICOPTER A109E

SERIAL NUMBER .....

REGISTRATION MARKS .....

FOR TRAINING ONLY

FOR TRAINING ONLY

Page of

CHART A – EQUIPMENT LIST
Report

RECORD OF CHECKING (Date and Signature)						

MODEL:	REGISTRATION MARKS	S/N

ITEM NUMBER	AUXILIARY EQUIPMENT		Q.TY	WEIGHT (kg)	ARM (mm)	MOMENT (kgmm)	Basic Configuration	In helicopter	Chart C entry	In helicopter	Chart C entry	In helicopter	Chart C entry
	P/N	DENOMINATION											

FOR TRAINING ONLY

FOR TRAINING ONLY

CHART B – HELICOPTER WEIGHING RECORD				Sheet 1 of 2	
DATE		MODEL		S/N	
PLACE		SIGNATURE		REGISTRATION MARKS	
JACKPOINTS	SCALE READING	TARE	NET WEIGHT	ARM	MOMENT
L.H. FORWARD					
R.H. FORWARD					
TOTAL FORWARD					
L.H. AFTWARD					
R.H. AFTWARD					
TOTAL AFTWARD					
TOTAL (As weighed)					

E = Distance from the reference datum (STA.0) to the forward jackpoints Station (See Chart D).

F = Distance from the reference datum (STA.0) to the aft jackpoints Station (See Chart D).

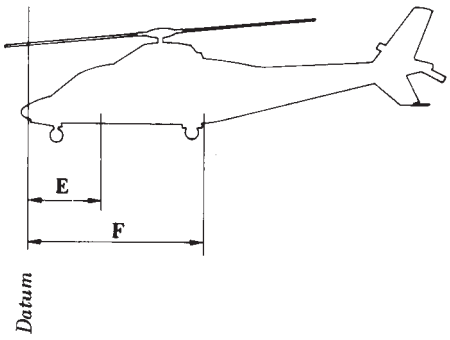

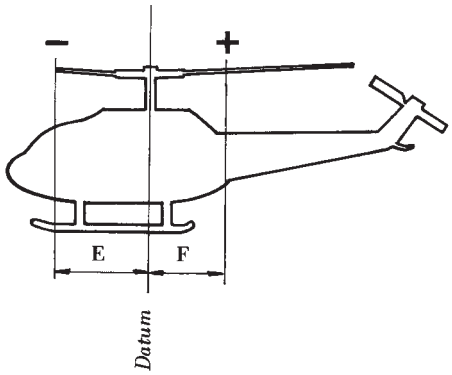

FOR TRAINING ONLY

FOR TRAINING ONLY

CHART B – HELICOPTER WEIGHING RECORD			Sheet 2 of 2
DESCRIPTION	NET WEIGHT	ARM	MOMENT
TOTAL (As weighed)			
SUBTRACT (See column 1 below)			
ADD (See column 2 below)			
TOTAL (Post to Chart C)			

COLUMN 1				COLUMN 2			
ITEMS WEIGHED BUT NOT PART OF BASIC WEIGHT	Weight	ARM	MOMENT	BASIC ITEMS NOT INSTALLED WHEN WEIGHED	Weight	ARM	MOMENT
TOTAL				TOTAL			

Reason for Weighing	Type Scales

REMARKS :

FOR TRAINING ONLY

FOR TRAINING ONLY

CHART C – BASIC WEIGHT AND BALANCE RECORD

Page No.

MODEL	S/N	REGISTRATION MARKS

DATE	Item No. See Chart A		DESCRIPTION	WEIGHT CHANGE ADDED (+) REMOVED (–)			TOTAL			SIGNATURE and/or VISAS
	IN	OUT		Weight	Arm	Moment	Weight	Moment	C.G.	

C.G. = Helicopter C.G. location. *IN = Installed.* *OUT = Removed.*

FOR TRAINING ONLY

FOR TRAINING ONLY